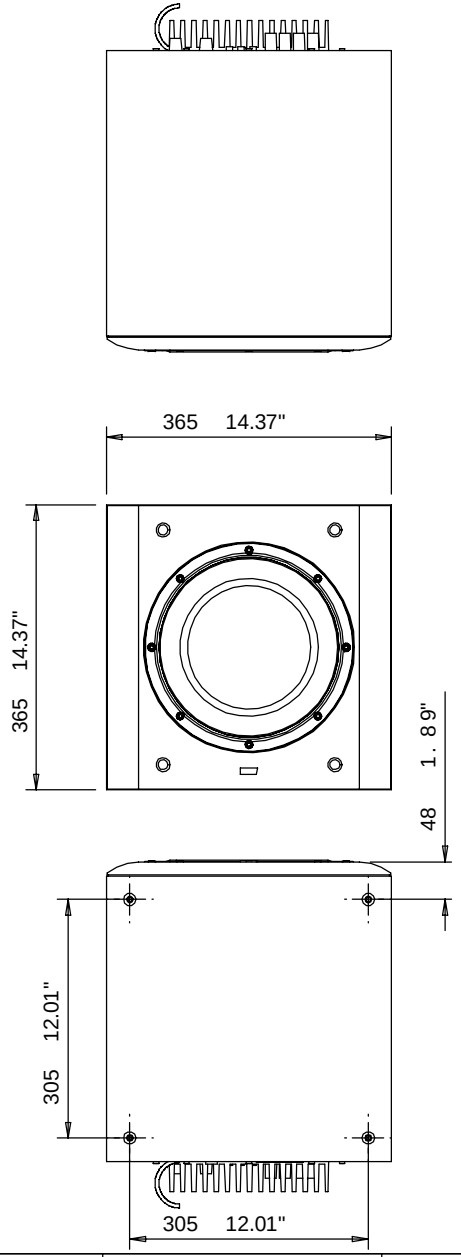

GRILLE OFF

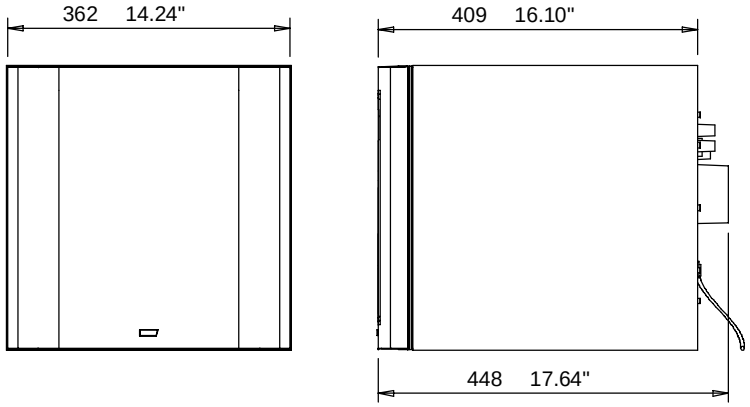

GRILLE ON

DO NOT SCALE	DIMENSIONS IN mm	MATERIAL					COPYRIGHT © 2006	PART NO.
B&W Bowers & Wilkins	TOLERANCES 0. ± 0.5 0.0 ± 0.3 0.00 ± 0.1 ANGLES ± 0.5° UNLESS OTHERWISE STATED	FINISH	ISS	AMENDMENT	ECN NO.	DATE	APPROVAL	DRAWN SDM / DATE 08/02/05	FP13846
			TITLE					CHECKED / APPROVED MC	DRG. NO. / ISS
			ASW 600 LINE DRAWING					SCALE NTS	A7913-1-1 / 1
								FULL DRG SIZE A3	